HOKUYO USA

PL d Category3 | SIL 2 Type 3

Safety Laser Scanner

UAM-05LP-T301

The Smallest Size in the World with a Versatile Range for Safety Applications

Actual Size

Protection Range MAX 5m

Warning Range MAX 20m

HOKUYO USA

SMALL AND LIGHT!

Compact and User Friendly

The compact design for Installation on AGVs, AGCs as well as In vertical guarding applications.

Size	95.0 (H) x 80.0 (W) x 80.0 (L) mm	
Weight	0.5 kg	
Conformity Standards	IEC61496-1/3	Type3
	IEC61508	SIL 2
	ISO13849-1	PL d Category3
	UL508	
	UL1998	
	UL61496-1	Type3
	CSA C22.2	No. 14

Collision Prevention

32 safety area patterns to accommodate the AGV travel path for collision prevention.

Presence Detection

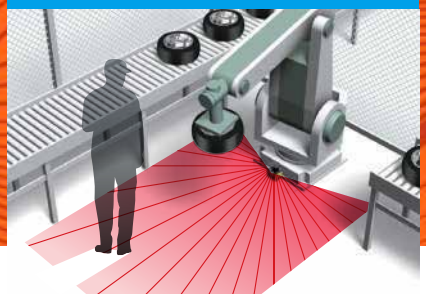

Detects humans or objects entering the hazardous area.

Intrusion Detection

Detects access into critical zone. Reference boundary monitoring feature improves the safety by detecting the gaps around the protection zone and sensor's misalignment.

HOKUYO USA

EXPANDS THE RANGE OF SAFETY APPLICATIONS

Protection over a Wide Range

Up to 5 meters of protection zone and 20 meters of warning zone configuration to suit various application requirements.

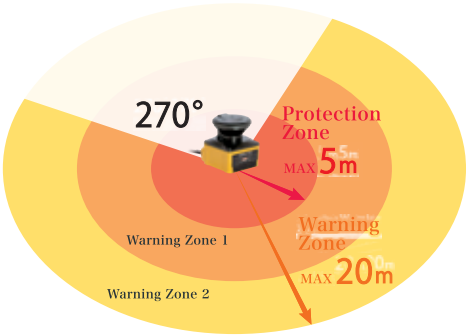

Data Output via Ethernet

Measurement data can be acquired via Ethernet with status of input/output signals and cyclic redundancy check code. Also supports command in SCIP2.0 protocol.

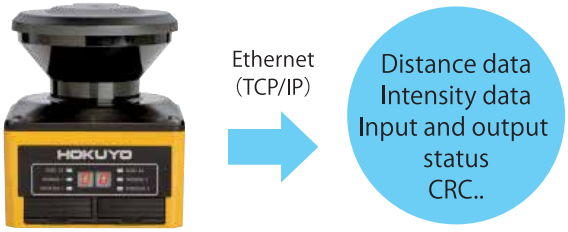

SD card for Configuration

Configuration data can be saved on an SD card which in turn can be used for configuring the UAM without connecting it to a PC. The feature is useful while replacing the UAM or configuring multiple units with the same settings.

Master-Slave Function

Maximum of 4 UAM units can be interconnected for Master-Slave operation when muliple units are required to guard the hazardous area. The system can be controlled by connecting the input and output signals to Master unit only.
Important Note: It is not possible to control the actuators via master-slave bus communication.

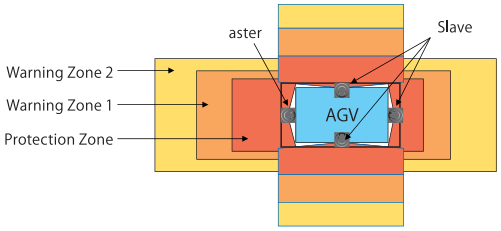

Encoder Input

In AGV applications, area is switched depending on the vehicle's speed. Speed and direction of travel provided via encoders are constantly monitored to switch the area and stop the AVG during abnormal travel.

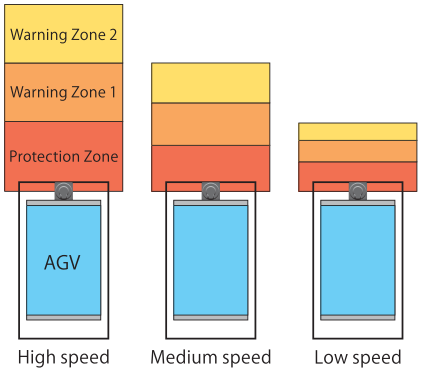

Dual Protection Mode

UAM can simultaneously protect two hazardous areas. Separate OSSD signals are triggered for the respective protection zones making it possible to guard two machines with a single UAM.

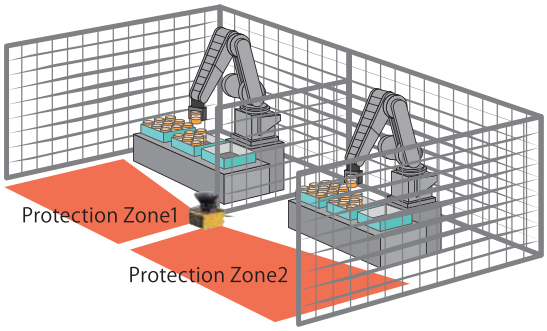

HOKUYO USA

EASY CONFIGURATION OF COMPLICATED ZONES

User Friendly Interface

Simple user interface to configure even a complicated zone by simultaneously viewing the measurement data. Zones can be configured with 3 different methods.

BEFORE SETTINGS

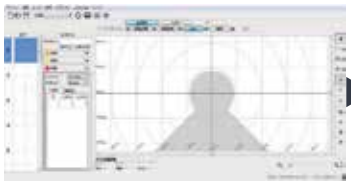

AFTER SETTINGS

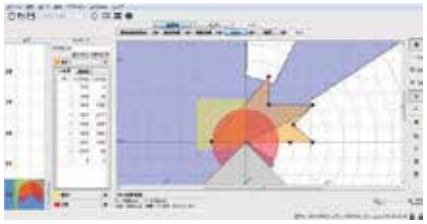

Category

Main unit

Appearance	Model number	Product code	Notes
	UAM-05LP-T301	UUAM005	CD-ROM consists of the configurator software and manual
	UAM-05LP-T301 C	UUAM006	

Extension cable without connector (Option)

Appearance	Specification	Model number	Product code	Notes
	Cable length: 10m	UAM-5C10	UZ00066	Bare cable (T301 only)
	Cable length: 20m	UAM-5C20	UZ00067	

Extension cable with connector (Option)

Appearance	Specification	Model number	Product code	Notes
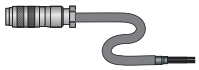	Cable length: 2m	UAM-5C02C	UZ00081	Each UAM requires 1 cable (T301C only)
	Cable length: 5m	UAM-5C05C	UZ00082	
	Cable length: 10m	UAM-5C10C	UZ00083	
	Cable length: 20m	UAM-5C20C	UZ00084	

USB cable (Option)

Appearance	Specification	Model number	Product code	Notes
	Micro USB Length: 1m	UAM-MUSB	UZ00065	For UAM configuration

Ethernet cable (Option)

Appearance	Specification	Model number	Product code	Notes
	Length: 3m	UAM-ENET	UZ00062	Ethernet cable is necessary for distance data output

Brackets and Optical Window (Option)

Appearance	Specification	Model number	Product code	Notes
	Base mounting bracket	UAM-BK03	UZ00059	
	Rear mounting bracket	UAM-BK04	UZ00060	
	Cover bracket	UAM-BK05	UZ00061	To protect the optical window
	Optical window	UAM-W002	UZ00064	For replacement when damaged and only to be fitted by approved personnel.

UAM Project Designer (Option)

Appearance	Specification	Model number	Product code	Notes
	CD-ROM	UAM-CD03	UZ00063	UAM Project Designer for functions and zone configuration

HOKUYO USA

UAM-05LP-T301

Product Specs

Subject		Specifications	
Model		UAM-05LP-T301	UAM-05LP-T301 C
Detection property	Protection Range	Max: 5m	
	Warning Range	Max : 20m (Non-safety) *1	
	Distance Tolerance *2	+100mm	
	Detection Capability	From Black-Reflector Sheet (1.8%) to Retro-Reflector Sheet	
	Detection Range	270°	
	Minimum Detectable Width	Ø30mm (Max : 1 .8m) Ø50mm (Max : 3.0m) Ø70mm(Max: 5.0m)	
	Scan Frequency	30ms (Rotational Speed 2000rpm)	
	Area Pattern	Max 32 patterns for safety and 64 patterns for non-safety	
	Response Time	OFF	60ms - 510ms
		ON	270ms - 510ms
Detection property	Element	Pulsed Laser Diode	
	Wave Length	905nm	
	Safety Class	Laser Class 1	
Type		Type 3 (IEC 61496-1, IEC 61496-3)	
Functional Safety		SIL 2 (Type B, HFT=1) (IEC61508)	
PFH_d		7.8x10-8 (T1 =20 year) : When master slave function is not in use. 1.6X10-7 (T1 =20 year): When master slave function is in use.	
Housing	Size	80.0mm (W), 80.0mm (D), 95.0mm (H) (without cable)	
	Weight	0.5kg	
	Protection	IP65	
	Case Material	Body : Aluminum / Optical Window : Polycarbonate	
	Connection Cable	Flying lead cable length : 3m	Cable with water proof connector / cable length : 0.3m
Power Supply		DC 24V ±10% : when operation using converter power supply DC 24V -30%1+20% : when operation using battery	
Supply Current	Normal (without load)	6W	
	Max. (with load)	50W	
Output	OSSD1/2 (Safety)	Output type (High side SW) Output current (Max : 500mA) *3 Leak current (Max : 1 mA) AWG26 Load tolerance (L/R=25ms, C=1 μF)	
	OSSD3/4 (Safety) WARNING 1/2 (Non-safety)	Output type (High side SW) Output current : (Max : 250mA) *3 Leak current (Max : 1 mA) AWG28 Load tolerance (L/R=25ms, C=1 μF)	
	RES_REQ 1 RES_REQ 2 MUT_OUT 1 MUT_OUT 2	Output type (PNP Transistor) Output current : (Max : 200mA) *3 Leak current (Max : 1 mA) AWG28	
Input	Area pattern 32 (5 Inputs x 2 Channels) EDM1/EDM2 MUTING1/MUTING2 MUTING3/MUTING4 OVERRIDE1/0VERRIDE2 RESET1 /RESET2 ENC_A 1 /ENC_A2 ENC_B1/ENC_B2	Input Impedance 4.7 kΩ AWG28	
Interface	Configuration	USB2.0 (USB micro type-B connector)	
	Data output	Ethernet 1 OOBASE-TX (Water proof connector)	
Environmental Resistance	Temperature	-10°C to +50°C (No freezing)	
	Storage Temperature	-25°C to + 70°C (No freezing)	
	Humidity	95% RH with no condensation	
	Storage Humidity	95% RH with no condensation	
	Surrounding Intensity *4	Less than 1500lx	
	Vibration	Frequency range : 10~55Hz Sweep rate : 1 octave/min Amplitude : 0.35mm ±0.05mm	
Bump		Acceleration : 98m/s²(10G) Pulse duration : 16ms	
Outdoor Operation		Not permitted	
Altitude		Below 2000m	

*1. Distance when reflectance of the object is 90% or above.
*2. Additional distance of 200 mm is needed when the UAM is working under high reflective background.
*3. Total current supply of OSSD output and Warning output should be below 1.0A.
*4 . When the light sources are located at ~5° from the detection plane of UAM.

Wiring example

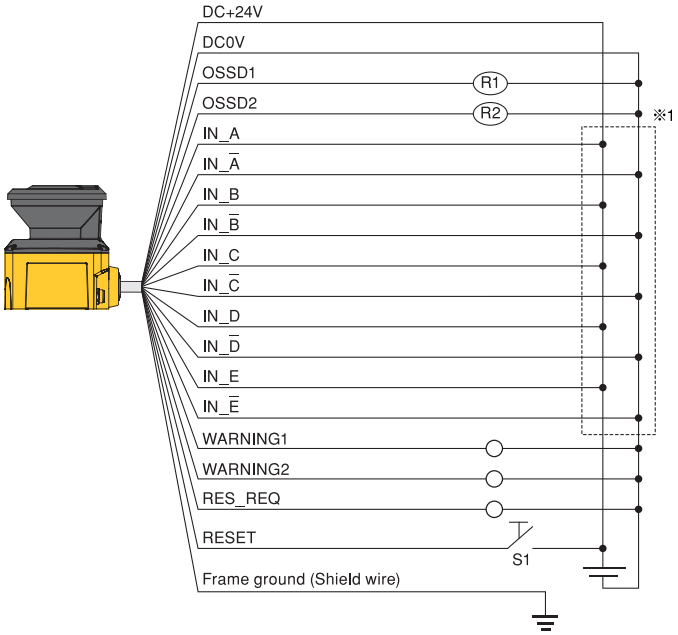

Color	Signal	Function	Description	AWG
Brown	+24V DC	Power	Power Supply : DC 24V	22
Blue	0V DC	Power	Power Supply : DC 0V	22
Red	0SSD1	Output	Protection zone output 1	26
Yellow	OSSD2	Output	Protection zone output 2	26
Red/Black	OSSD3/ WARNING1	Output	Protection zone output 3/ Warning zone output 1	28
Yellow/Black	OSSD4/ WARNING2	Output	Protection zone output 4/ Warning zone output 2	28
Purple	IN_A	Input	Area Switching Input A	28
Gray	IN_B/ MUTING3	Input	Area Switching Input B/ Muting input 3	28
White	IN_C/OVERRIDE1/ ENC1_A	Input	Area Switching Input C /Override input 1 /Encoder input 1_A	28
Pink	IN_D/MUTING1/ ENC1_B	Input	Area Switching Input D /Muting input 1 /Encoder input 1_B	28
Green	IN_E/EDM1	Input	Area Switching Input E/ External device monitoring 1	28
Purple/Black	IN_A	Input	Area Switching Input A invert	28
Gray/Black	IN_B/ MUTING4	Input	Area Switching Input B invert/ Muting input 4	28
White/Black	IN_C/OVERRIDE2/ ENC2_A	Input	Area Switching Input C invert/ Override input2/Encoder input2_A	28
Pink/Black	IN_D/MUTIN ENC2_B	Input	Area Switching Input D invert/ Muting input 2/Encoder input 2_B	28
Green/Black	IN_E/EDM2	Input	Area Switching Input E invert External device monitoring 2	28
Yellow/Green	RESET1	Input	Reset input 1	28
Yellow/Blue	RESET2	Input	Reset input 2	28
Orange	RES_REQ1 MUT_OUT1	Output	RES_RE1Q : Request output1 MUT_OUT1 : Muting state output1	28
Orange/Black	RES_REQ2 MUT_OUT1	Output	RES_REQ 2 : Request output2 MUT OUT2 : Mutings tateo utput2	28
White/Blue(TP)	RS485+	Communication	Communication Protocol RS485	28
White/Red(TP)	RS485-	Communication	Communication Protocol RS485	28
Shield wire	FG	-	Frame ground	-

R1 and R2 : External equipment (Safety relay, Electromagnetic contactor)
S1: Interlock reset switch

*1: Refer to user's manual for details on area switching.

Input/Output circuit

OSSD output circuit

OSSD/Warning output is output type.

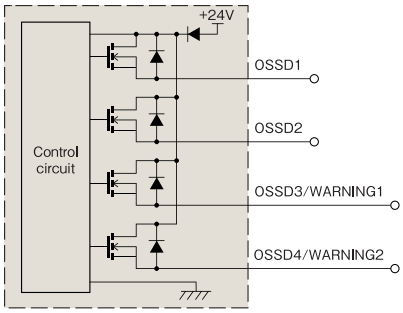

Other Output circuit

RES_REQ1, RES_REQ2, MUT OUT1, MUT OUT2 output circuit.

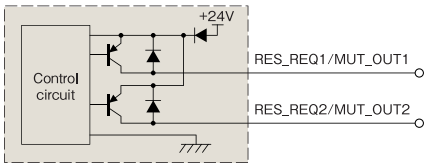

Input circuit

Area input, EDM 1 , EDM2, RESET1 , RESET2, MUTING1, MUTING2, MUTING3, MUTING4, OVERRIDE1, and OVERRIDE2

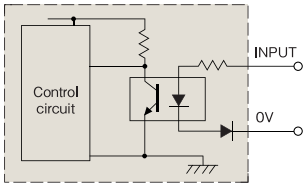

HOKUYO USA

UAM-05LP-T301

Dimensions

Sensor

UAM-05LP-T301

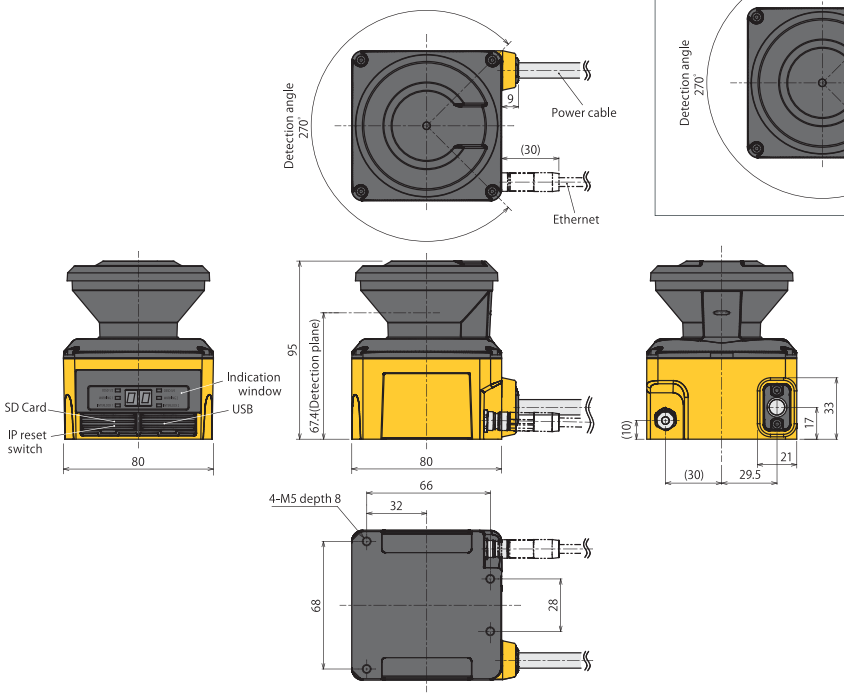

UAM-05LP-T301C

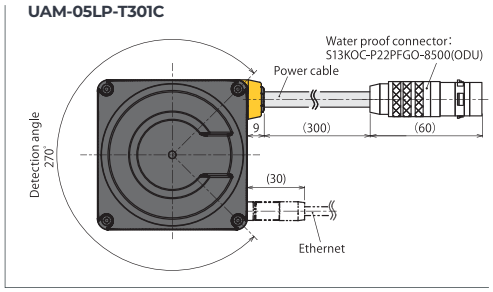

Fixing of Rear mounting bracket with Cover bracket

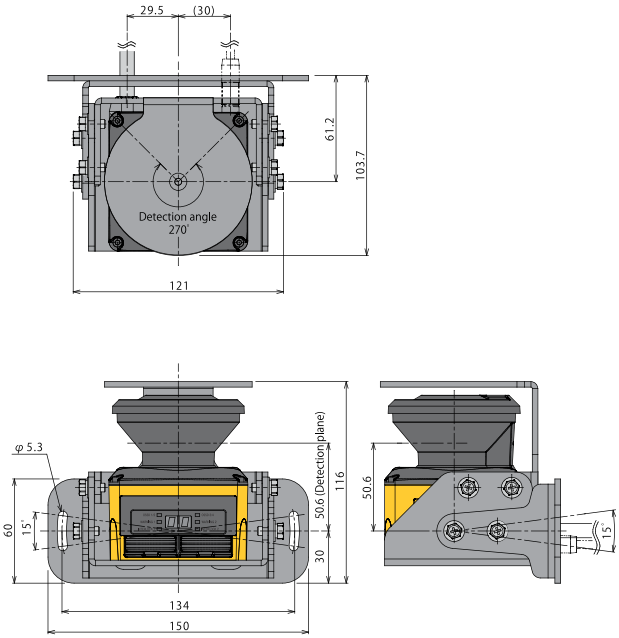

Fixing of Base mounting bracket with Cover bracket

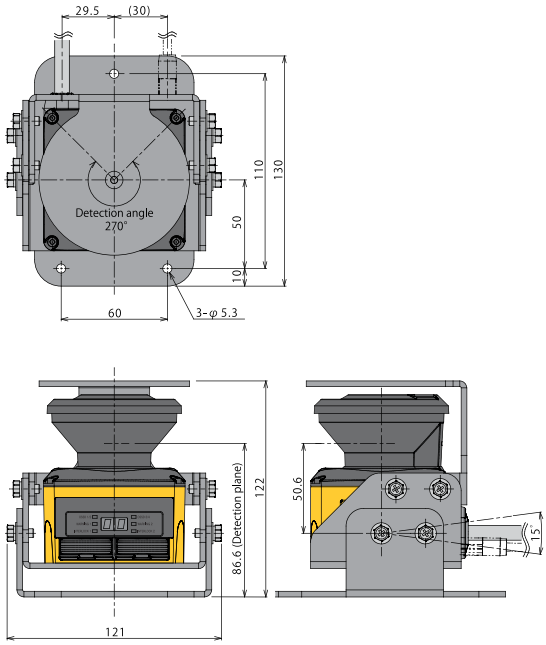

HOKUYO USA

ISO14001 Certified
JQA-EM3873

ISO9001 Certified
JQA-1742

Caution for safety use

- Read instruction manual carefully before use.
- Products published in this brochure are intended to be used under specific conditions.
- For product related questions or technical issues, please contact our offices.

The contents of this catalog are based on material from September 2016. External dimensions and specifications may change without notice.

HOKUYO AUTOMATIC CO.,LTD.
Higobashi Union Building, 1-9-6 Edobori, Nishi-ku,
Osaka-shi,Osaka, 550-0002 Japan
TEL: +81-6-6441-2239 FAX: +81-6-6441-2204
URL: http://www.hokuyo-aut.jp
E-mail: info@hokuyo-aut.jp

●EUROPE
HOKUYO AUTOMATIC CO., LTD. Amsterdam Branch
Prof. J.H. Bavincklaan 2, 1183 AT Amstelveen, The Netherlands
TEL: +31-20-240-0110
E-mail: info@hokuyo-aut.jp

●AMERICA
Hokuyo Automatic USA Corporation
2019 Van Buren Ave. Suite A, Indian Trail, North Carolina 28079 U.S.A.
TEL: +1-704-882-3844
E-mail: sales@hokuyo-usa.com

●KOREA
HOKUYO KOREA CO., LTD.
104-211, 397 Seokcheon-Ro, Ojeong-Gu, Bucheon-City, Korea
TEL: +82-32-624-3194
E-mail: hokuyokorea@naver.com

Catalog No. CRS-0079E 19.11